SREG-300W-01
300 Watt 28VDC
Power Module

Model Number	SREG-300W-01
Maximum Total Wattage	300 Watts
Primary Output	24 VDC to 28 VDC +/-0.2V 11 Amps/300 Watts Maximum
Secondary Output	5 VDC to 7 VDC +/-0.2V 10 Amps/50 Watts Maximum
Output Ripple, all outputs	200 mV Maximum
Backup Battery	24 VDC to 32 VDC
Backup Battery Chemistry	NiMH, NiCAD, SLA, LiPO [1], Lead Acid
External Shore Power	24 VDC to 32 VDC
Alternator Input Voltage	29 VAC to 85 VAC
Self Protection	Overvoltage, Undervoltage, Overcurrent, Reverse EMF
Environment	-20C to 65C
Physical	Aluminum Enclosure 14.0 cm x 7.3 cm x 7.6 cm Enclosure weight 256g Typical Total Weight 560g

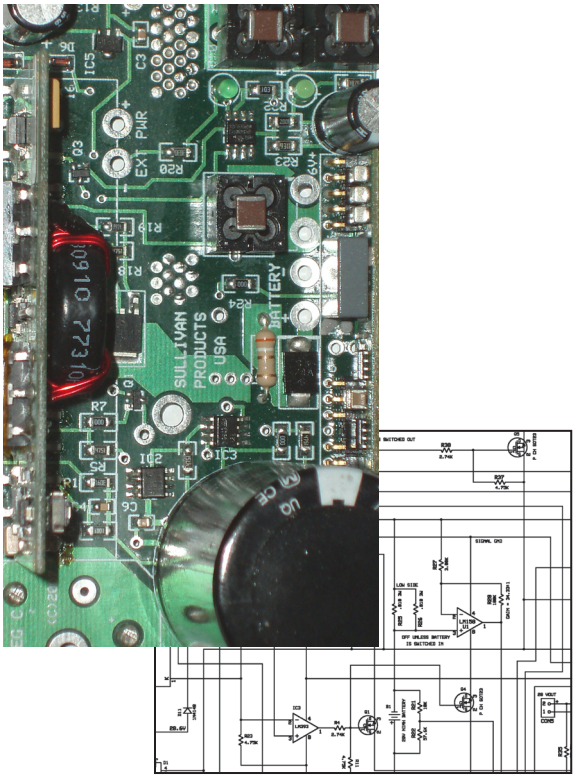

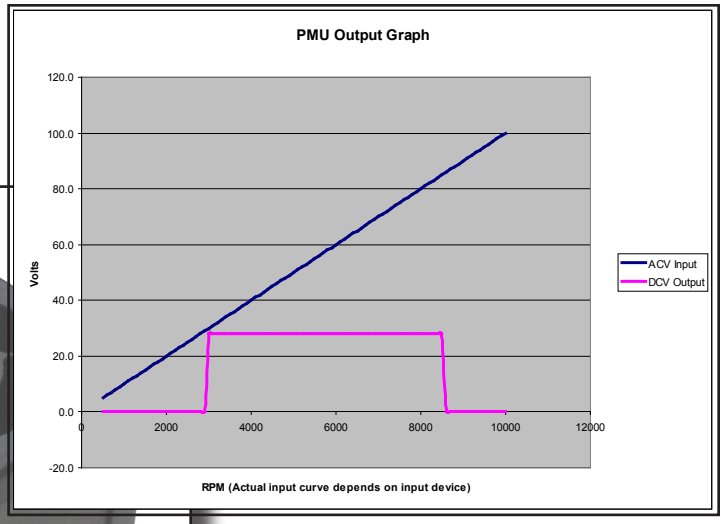

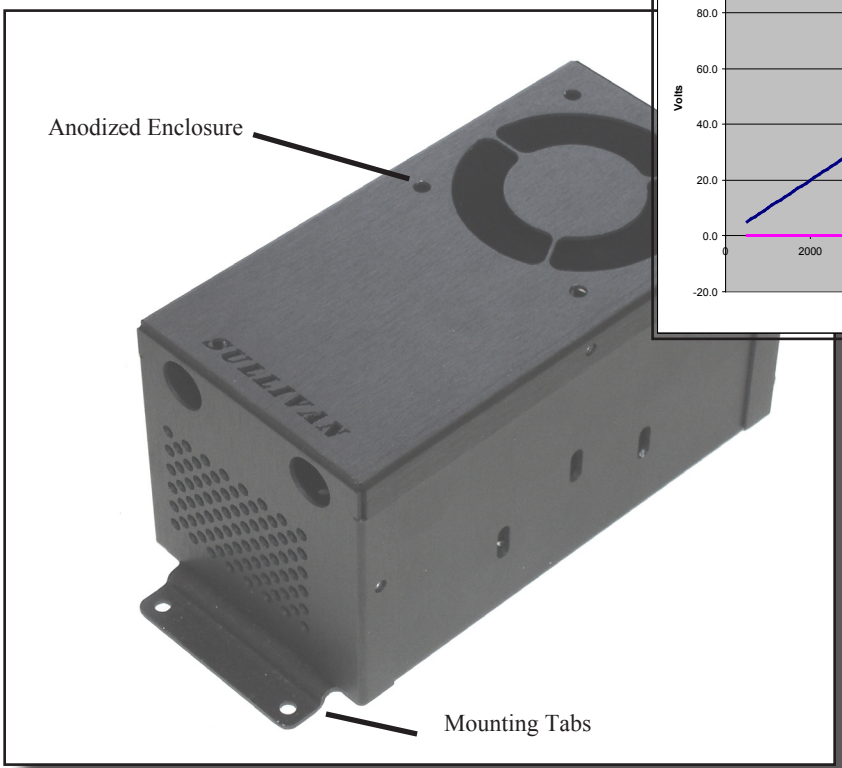

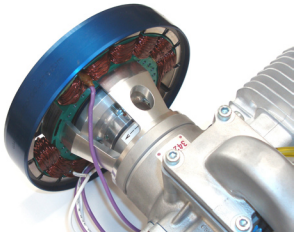

Sullivan Products
1 North Haven Street, Baltimore, MD 21224 USA
ph 410-732-3500 fax 410-327-7443
www.sullivanuv.com

SREG-300W-01
300 Watt 28VDC
Power Module

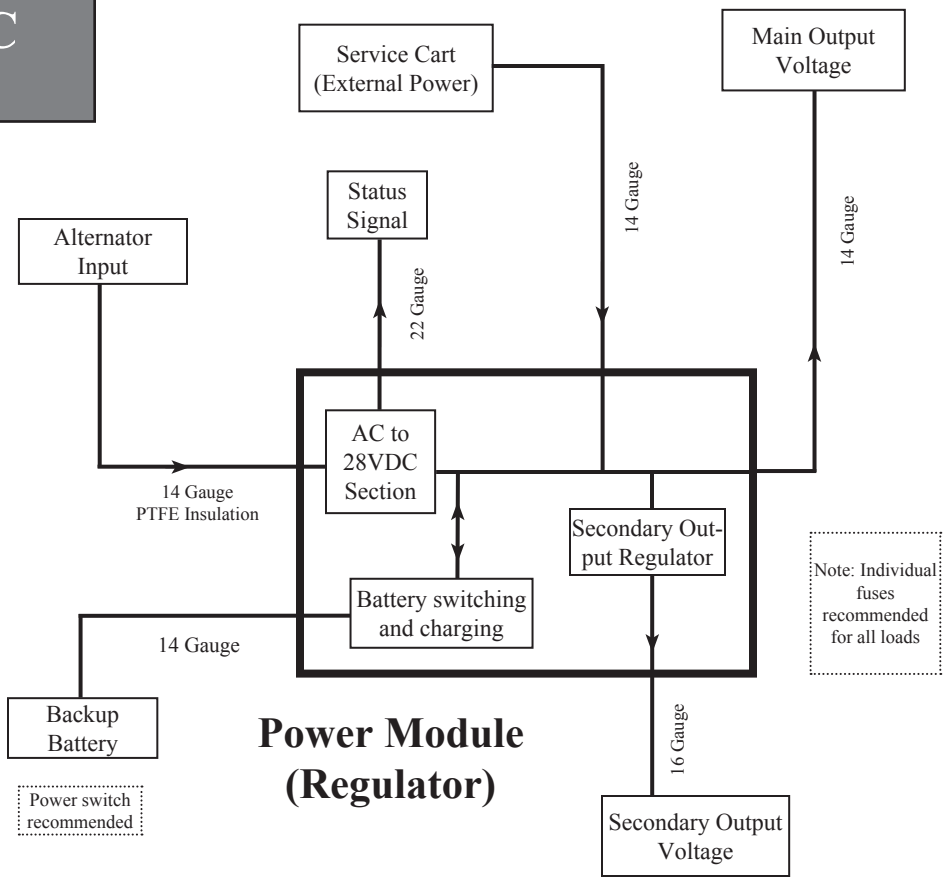

Standard Specifications

- **Main Output** 24VDC to 28 VDC (trimmable) +/-0.2V regulation
  Maximum Ripple 200 mV
  11A/300W maximum
- **Secondary Output** 4.8VDC to 7VDC (trimmable) +/-0.20V regulation
  Maximum Ripple 200 mV
  10A/50W maximum
- **Output Leads** 30 mm Pigtail standard
- **Alternator Input** 29 VAC to 85 VAC, 0 to 1 KHz
- **Backup Battery Switching**
  Analog, switch time < 200 nS, circuit powered by backup battery.
- **Backup Battery Charging**
  Microprocessor controlled. 0.32A standard peak charge rate. Active when alternator is supplying regulated voltage.
- **Status Signal** 5V high impedance
  5V = Alternator supplying power
  0V = battery supplying power
- **External Power Connections**
  24V to 32V
  Supplies main output and secondary output, disconnects internal backup battery
- **EMI Filtering** LC type 50 MHz to 1 GHz
- **Design specification** Mil-Std 1275D
- **Conformal coating** Urethane
- **Enclosure** Anodized aluminum with thermal management
- **Output leads** 30 mm Pigtail standard

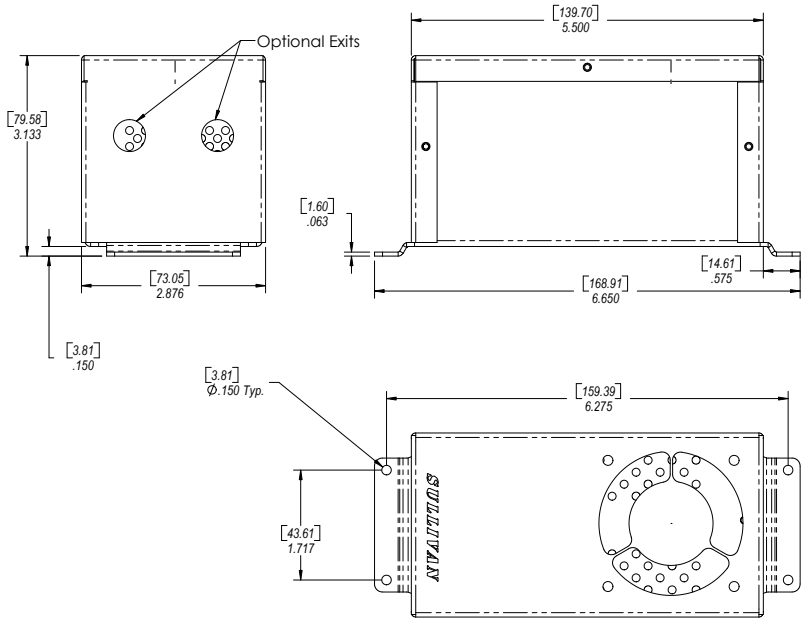

Optional Features:
- An additional secondary output (3.3V to 24V)
- Higher charging rate for backup battery
- LiPO charging module
- Heavy Duty Conformal Coating
- Different output lead configurations

(1) Backup Battery Note:
Some LiPO batteries require cell voltage monitoring, especially at higher charge rates. This requires an optional charging module and a connection to the battery's balancing harness.

Sullivan Products
1 North Haven Street, Baltimore, MD 21224 USA
ph 410-732-3500 fax 410-327-7443
www.sullivanuv.com

Rev 2008-03-27